PASS-THRU™
CONNECTORS AND CRIMPERS

Now with CAT6A UTP and STP Connectors for CAT6A cable and larger diameter/thicker jacket CAT6 cable

CAT6/6A CONNECTORS FULLY COMPLIANT WITH PoE AND PoE+ STANDARDS

KLEIN TOOLS®

PASS-THRU™ CONNECTORS

Klein-designed Pass-Thru™ Connectors provide fast, reliable connector installations for voice and data applications. Cable easily passes through connector for consistent and secure terminations.

- 8 position, 8 contact pass-through type data plugs for solid or stranded wire

CAT6/6A connectors are fully compliant with Power over Ethernet PoE and PoE+ standards

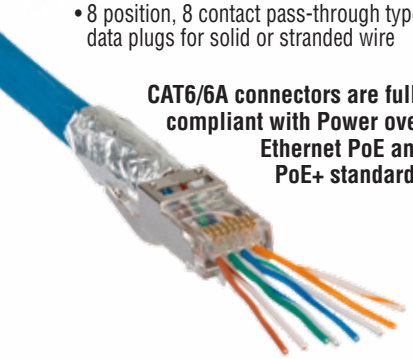

CAT5e

CAT6

CAT6A UTP

CAT6A STP

Cable Type	Cat. No.	UPC 0-92644+	Pack Size
CAT5e	**VDV826-728**	69097-6	10
	VDV826-702	69082-2	50
	VDV826-762	69188-1	200
CAT6	**VDV826-729**	69092-1	10
	VDV826-703	69093-8	50
	VDV826-763	69189-8	200
NEW CAT6A UTP*	**VDV826-704**	58378-0	50
	VDV826-764	58379-7	200
NEW CAT6A STP**	**VDV826-705**	58391-9	50
	VDV826-754	58392-6	100

* Unshielded Twisted Pair **Shielded Twisted Pair

PASS-THRU™ CRIMPERS

Pass-Thru technology significantly reduces prep work time, with flush cut wire trimming blades. Klein offers modular crimp-connector installation tools for voice and data applications with Pass-Thru RJ45 connector plugs.

Ratcheting Modular Crimper

VDV226-110

- Cuts, strips, crimps and trims twisted pair cable (STP/UTP)
- Crimps 4, 6 and 8 position modular connectors
  - RJ11/RJ12 standard
  - RJ45 Klein Tools Pass-Thru™
- Full-cycle ratchet mechanism ensures complete connector termination
- 2,000+ cuts from durable, heat-treated blades

VDV226-110

- On-tool wiring diagram helps eliminate rework and wasted materials
- Use with Klein Tools Pass-Thru™ Connectors
- Not for use with standard (non Pass-Thru™) connectors
- Replacement blades available

Compact Modular Crimper

VDV226-005

- Crimps and trims Klein Tools RJ45 Pass-Thru™ connectors onto paired-conductor cables (round STP/UTP cables)

VDV226-005

Cat. No.	UPC 0-92644+	Description	Cable Type	Connector Type	Position/Pair/Conductors
VDV226-110	69094-5	Pass Thru™ Ratcheting Modular Crimper	CAT5e, CAT6/6A	RJ45 Klein Tools Pass-Thru™	8-Position, 4-Pair/8-Conductor
VDV226-005	58287-5	Pass-Thru™ Compact Crimper			
VDV999-076	69112-6	Replacement Blade Kit for VDV226-110			
VDV999-078	58332-2	Replacement Blade Kit for VDV226-005			

⚠ Visit www.kleintools.com for warnings and instructions.

See our complete line of **Pass-Thru™ Connectors, Crimpers and Accessories**
www.kleintools.com

For Professionals
SINCE 1857™

KLEIN TOOLS®

© 2021 Klein Tools, Inc.
Lincolnshire, IL 60069
82979 Rev. 06/21 A